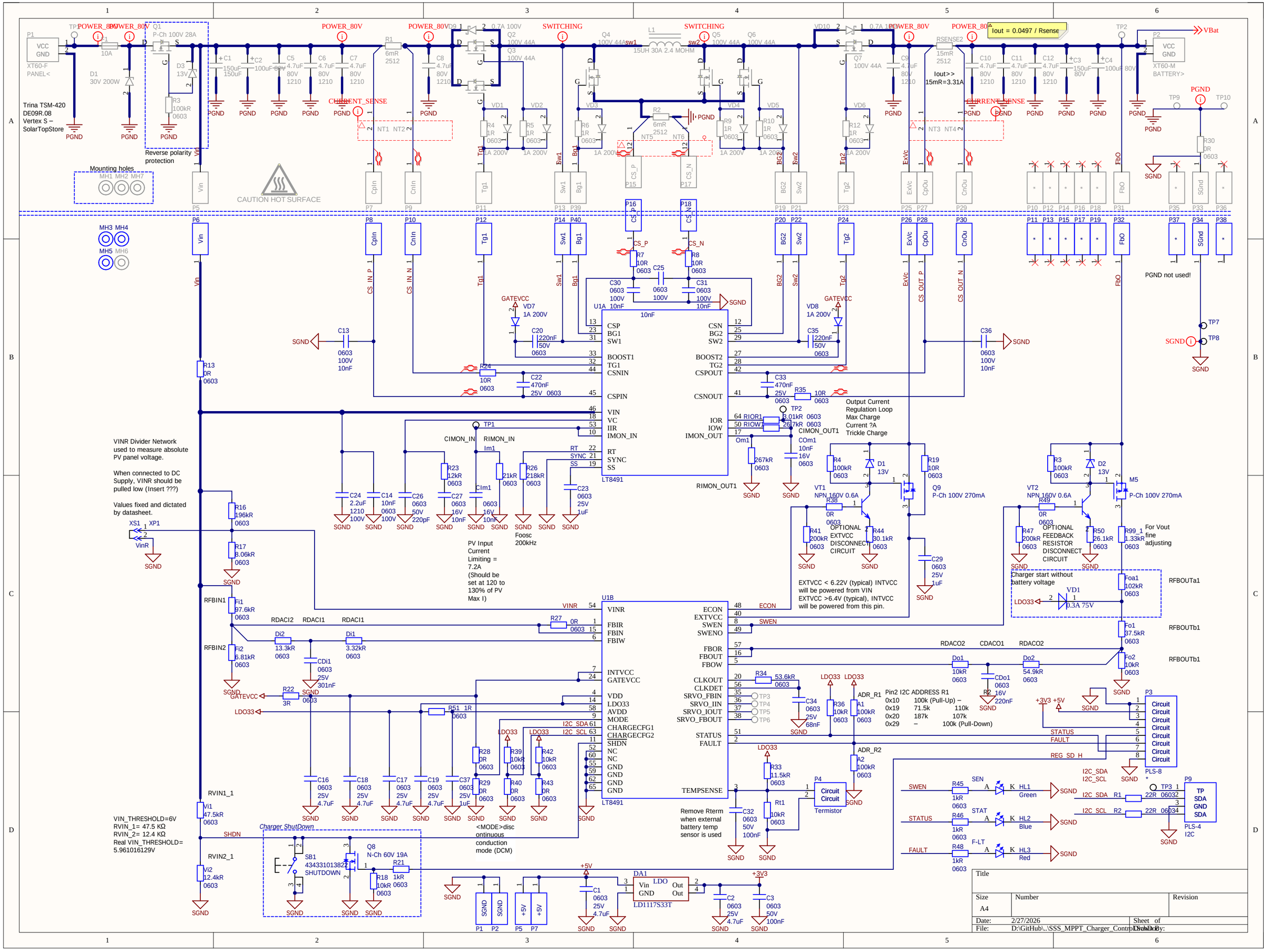
Trina TSM-420
DE09R.08
Vertex S –
SolarTopStore
Reverse polarity protection
Mounting holes
CAUTION HOT SURFACE
Iout = 0.0497 / Rsense
Iout>> 15mR=3.31A
PGND not used!
VINR Divider Network used to measure absolute PV panel voltage.
When connected to DC Supply, VINR should be pulled low (Insert ???)
Values fixed and dictated by datasheet.
VIN_THRESHOLD=6V
RVIN_1= 47.5 KΩ
RVIN_2= 12.4 KΩ
Real VIN_THRESHOLD= 5.961016129V
PV Input Current Limiting = 7.2A (Should be set at 120 to 130% of PV Max I)
Foosc 200kHz
<MODE>disc ontinuous conduction mode (DCM)
Output Current Regulation Loop Max Charge Current ?A Trickle Charge
EXTVCC < 6.22V (typical) INTVCC will be powered from VIN
EXTVCC >6.4V (typical), INTVCC will be powered from this pin.
OPTIONAL EXTVCC DISCONNECT CIRCUIT
OPTIONAL FEEDBACK RESISTOR DISCONNECT CIRCUIT
For Vout fine adjusting
Charger start without battery voltage
Pin2 I2C ADDRESS R1
0x10 100k (Pull-Up) –
0x19 71.5k 110k
0x20 187k 107k
0x29 – 100k (Pull-Down)
Remove Rterm when external battery temp sensor is used
Charger ShutDown
SHUTDOWN
LT8491
LD1117S33T
Date: 2/27/2026
Sheet of
Drawn By:
Size A4
Number
Revision
Title